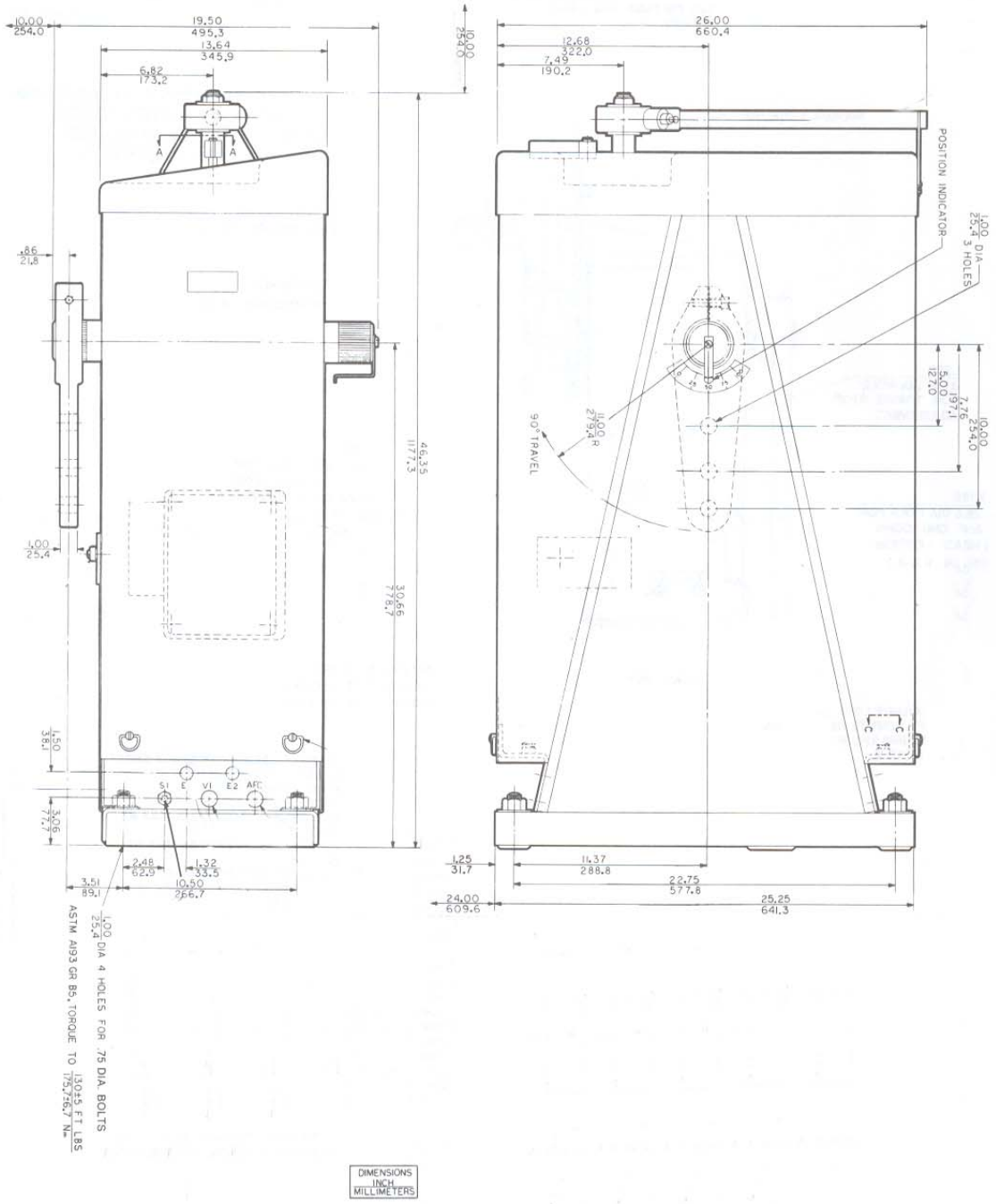

Type UP30/UP40